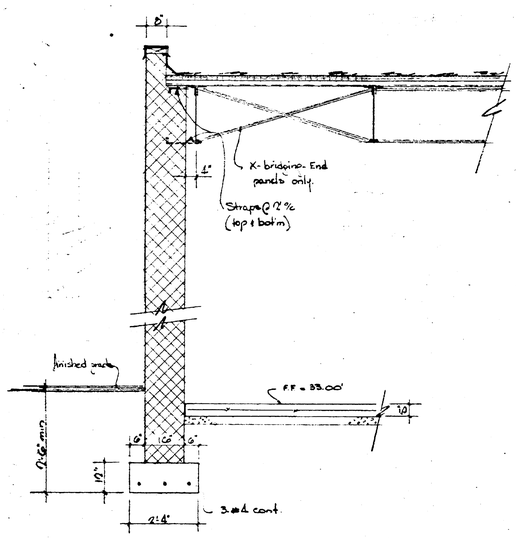

SECTION A/16
1/2"=1'-0"

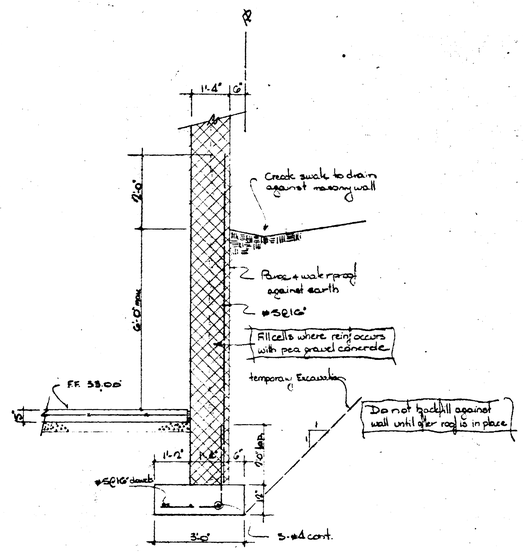

SECTION D/16
1/2"=1'-0"

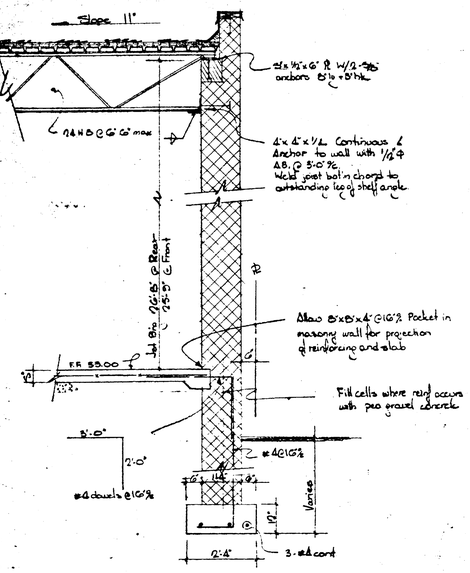

SECTION E/16
1/2"=1'-0"

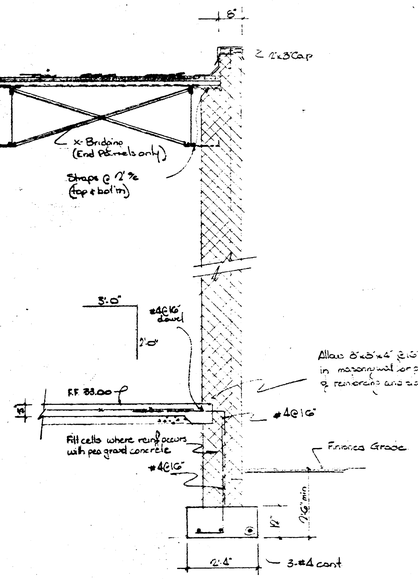

SECTION A/16
1/2"=1'-0"

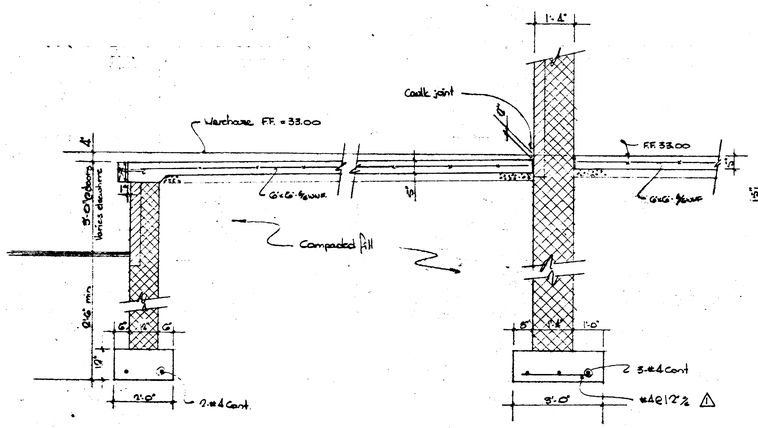

SECTION G/16
1/2"=1'-0"

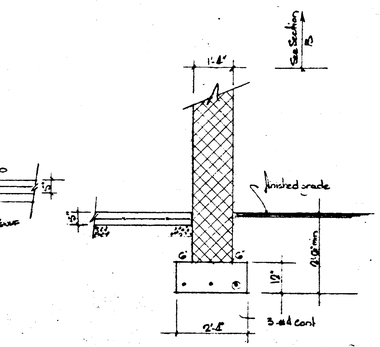

SECTION C/16

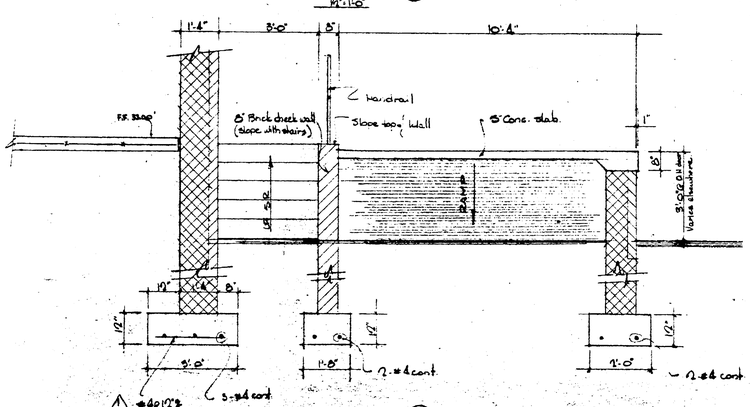

SECTION P/16

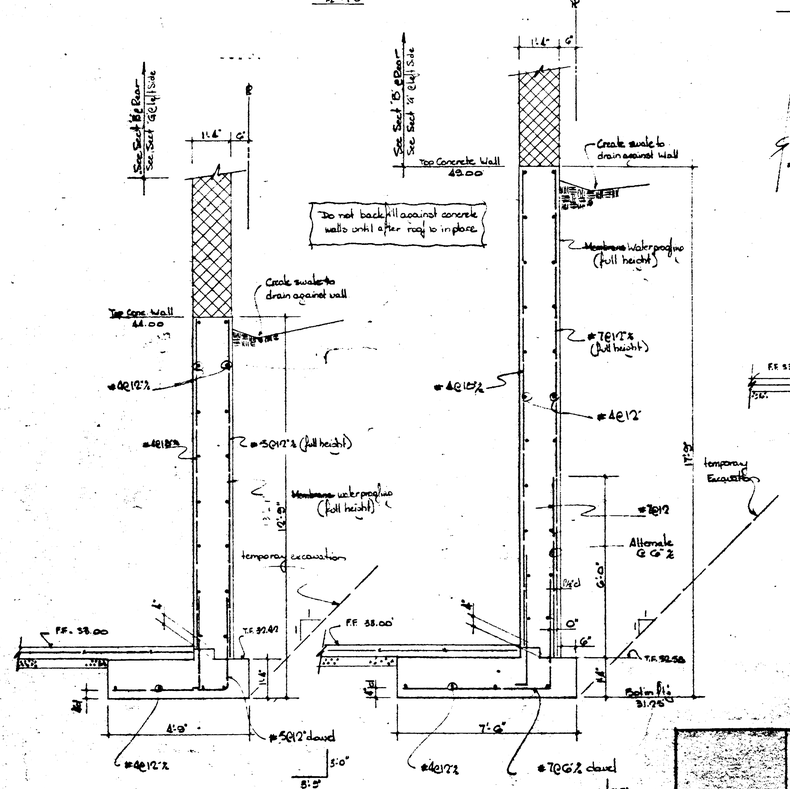

SECTION E/16
1/2"=1'-0"

SECTION F/16
1/2"=1'-0"

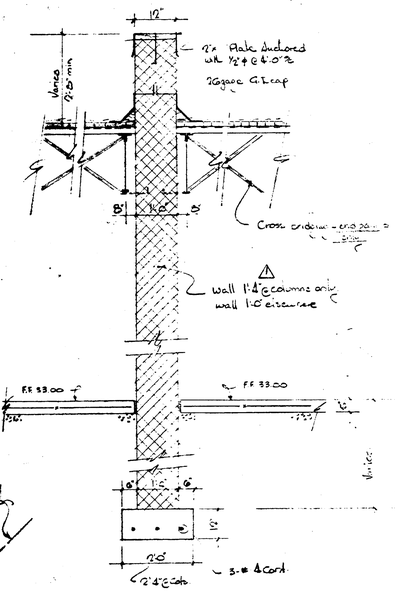

SECTION R/16
1/2"=1'-0"

REVISIONS		
1	1/24	5-7-70

PROPOSED

WAREHOUSE NO. 4

SYNTHESIS INDUSTRIAL

MARTIN INDUSTRIAL PARK VENTURE
2040 University Blvd. E.
Aspen Hill, Maryland

MARCH ASSOCIATES
Consulting Engineers
217 Silver Spring Ave.
Silver Spring, Md.